Power Seat Motor

MITSUBA
株式会社 ミツバ

Function

■ Adjusts the seat position

Mitsuba Models: WR14A / WR16A

■ Motor type: Brushed
■ Vehicles where product can be installed: ICE (internal combustion engine) vehicles, xEV (next generation) vehicles
■ Release year: 2011

Features

■ WR14A is a 6-pole, 9-slot, thin-thickness type, brushed motor with two-stage reduction mechanism and excellent motor mounting layout on the seat frame.
■ WR16A is a single-shaft, 6-pole, 9-slot brushed motor that is compact and lightweight with square holes on both ends of the shaft to allow connection between the mechanical parts and the motor.

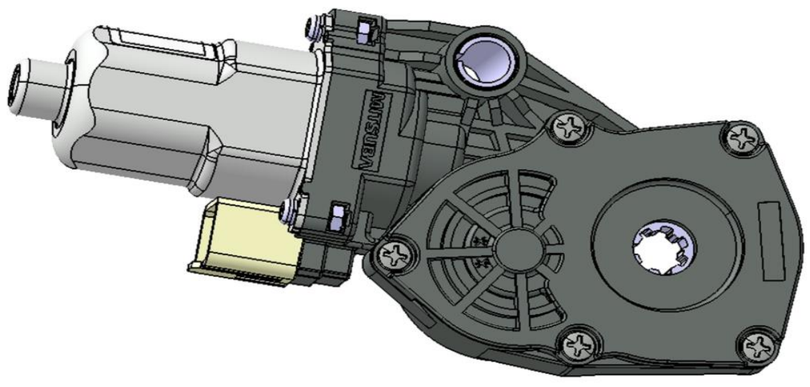

WR14A (With Reduction Gear)

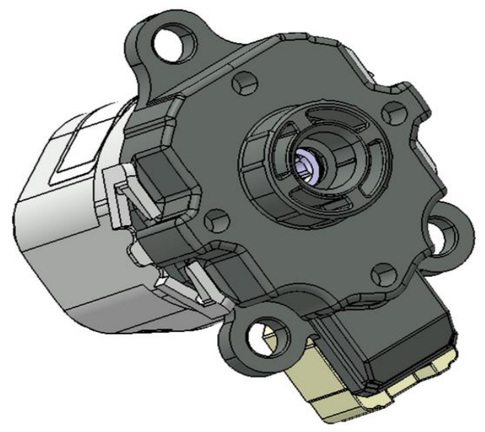

WR16A (Without Reduction Gear)

Specifications and Appearance

		WR14A (With Reduction Gear)	WR16A (Without Reduction Gear)
Approximate dimensions (mm)		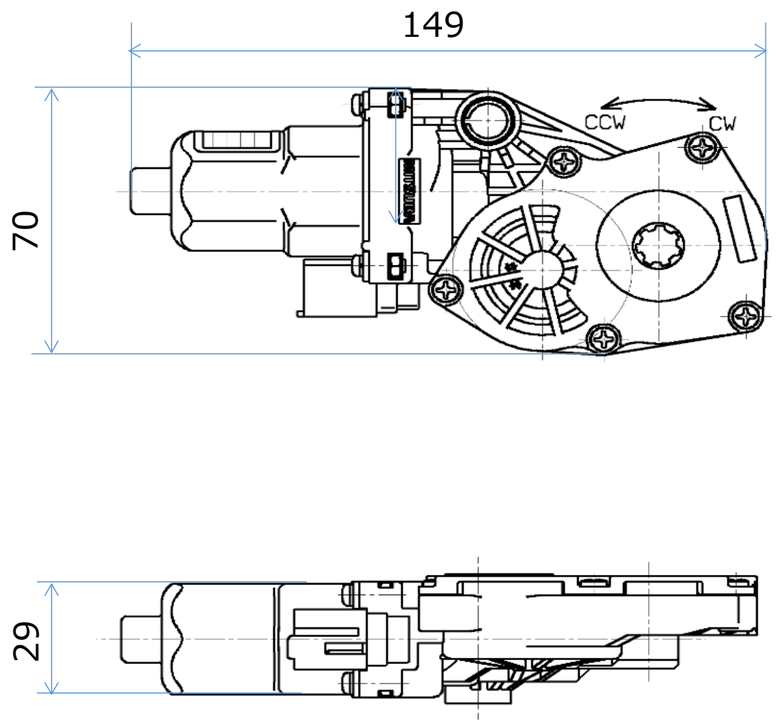	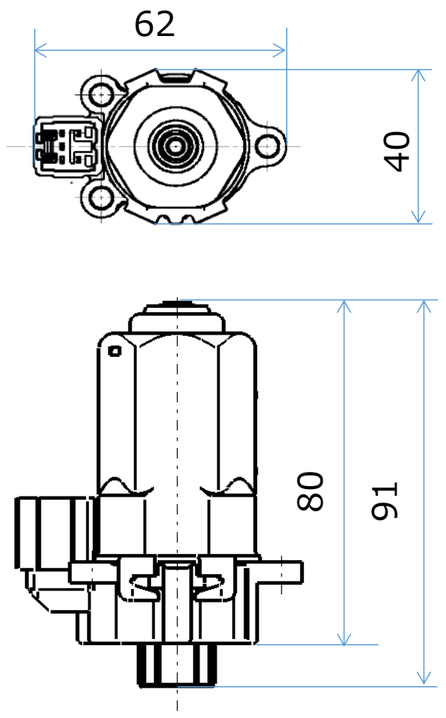
Voltage		13.5 V	
Lock	Torque	24 Nm	0.45 Nm
	Current	Max. 20.0 A	Max. 23.0 A
Rated	Torque	7.84 Nm	0.125 Nm
	Rotational speed	18 rpm	2050 rpm
	Current	Max. 7.0 A	Max. 5.0 A
Weight		305 g	212 g

	WR14A	WR16A
Maximum motor output	16 W	34 W

Countries of Manufacture

■ WR14A: Japan, China, and Philippines
■ WR16A: Philippines